Relay Services with STIR/SHAKEN

For ITU-T Joint Coordinating Activity - Accessibility and Human Factors

August 31st, 2021

Chris Drake – CTO, iconectiv

© 2010-2021 iconectiv, LLC. All rights reserved.

iconectiv®

implications for relay services with STIR/SHAKEN

STIR/SHAKEN Call Authentication was designed to mitigate the threat from illegal robocalls (including CLI spoofing with intent to do harm)

Voice service providers deploying Call Authentication will need to “attest” to the authenticity of the calling party number used in all originations including relay calls.

Relay services (e.g., signing, captioning, etc.) for voice service accessibility is an important use case for legitimate CLI spoofing.

Determining the attestation level is based on SHAKEN guidelines <u>and the local policy</u> of every originating voice service provider.

The local policy must address how full attestation could be provided for such legitimately spoofed relay calls.

© 2010-2021 iconectiv, LLC. All rights reserved.

STIR/SHAKEN standards and U.S. relay providers

Voice service providers serving the relay provider must attest to Caller ID authenticity for every call origination

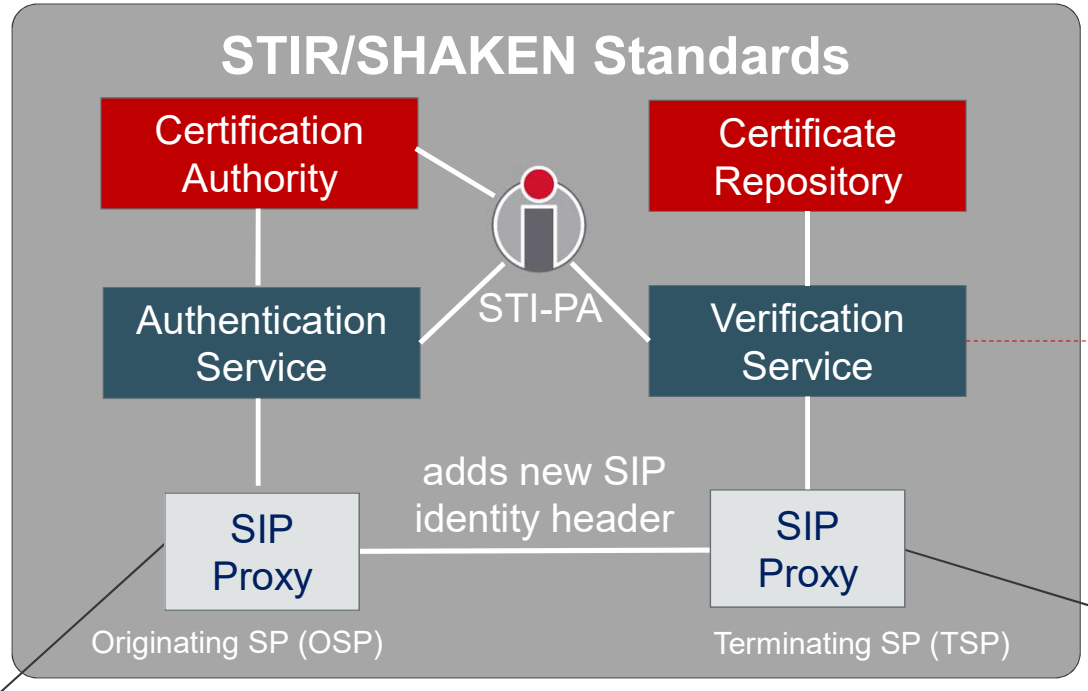

Call Validation Treatment (CVT)

Call blocking & display analytics

CallerID display

Called party

Calling party

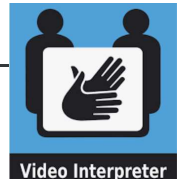

Relay provider

CallerID Attestations
A=fully authenticated
B=partially authenticated
C=gateway (i.e., unknown)

iconectiv

© 2010-2021 iconectiv, LLC. All rights reserved.

SHAKEN Caller ID attestation

The originating voice service provider serving the call originators must establish local policy to determine what attestation to encode in the identity header regarding CallerID authenticity for every call origination.

"A" Full Attestation

- SP is responsible for the origination of the call onto the IP based service provider voice network
- SP has a direct authenticated relationship with the customer and can identify the customer
- SP has established a verified association with the telephone number used for the call.

"B" Partial Attestation

- SP is responsible for the origination of the call onto its IP-based voice network.
- SP has a direct authenticated relationship with the customer and can identify the customer.
- SP has NOT established a verified association with the telephone number being used for the call.

"C" Gateway Attestation

- SP is the entry point of the call into the VoIP network.
- SP has no relationship with the initiator of the call (e.g., international gateways, wholesale trunks, etc.).

© 2010-2021 iconectiv, LLC. All rights reserved.

alternatives for relay services in STIR/SHAKEN

There are 3 main alternatives for originating voice service providers to fully attest ("A") to the authenticity of the caller ID sent by the relay provider:

1. The relay provider might qualify to acquire a SHAKEN certificate for attesting to it's own calls in which case a local policy will be required to ensure relay customers are not falsifying the number they wish attested to as the Caller ID. Certificate eligibility criteria is documented at https://sti-ga.atis.org/
2. The relay provider could be delegated a certificate to sign their own calls. However with the broad number base they serve (basically subscribers could be on any voice service provider), that requires a lot of carriers supplying delegate certificates as well as originating service providers supporting the delegated signature.
3. The relay provider could make arrangements regarding attestation with the originating service provider(s) used to put their calls onto the PSTN. The level of attestation they will support for your use case will be a matter of local policy for those carriers bearing in mind that they are accountable when attesting on your behalf.

Option 3 is the most practical approach in the near term

© 2010-2021 iconectiv, LLC. All rights reserved.

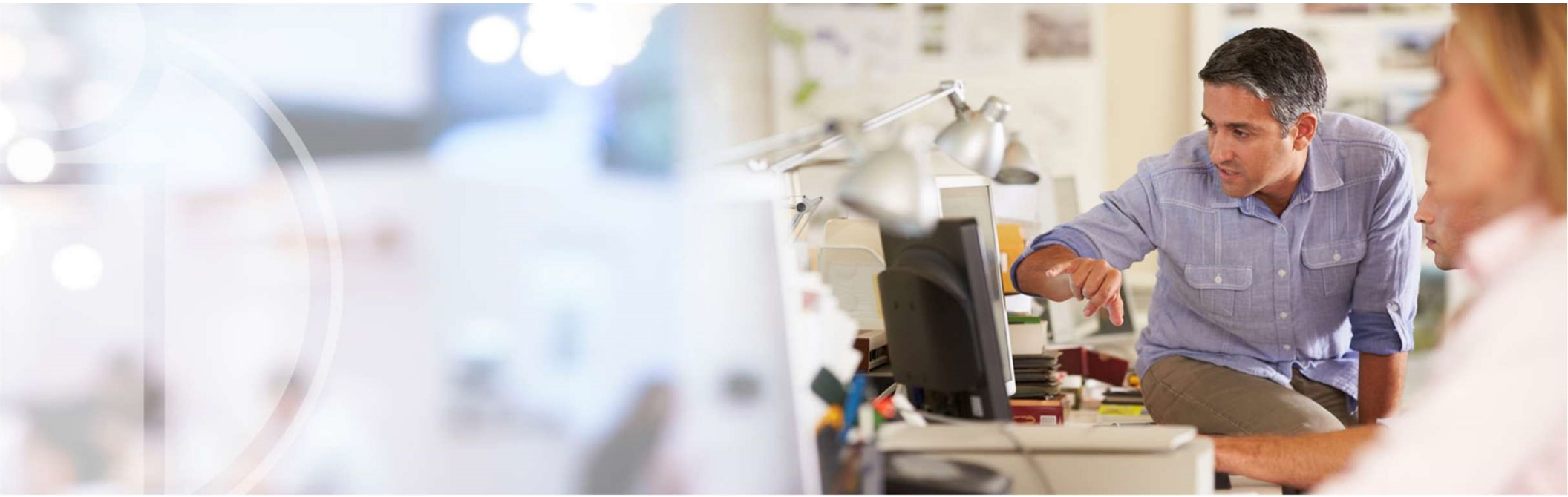

backup detail

© 2010-2021 iconectiv, LLC. All rights reserved.

authentication @ originating SP (OSP)

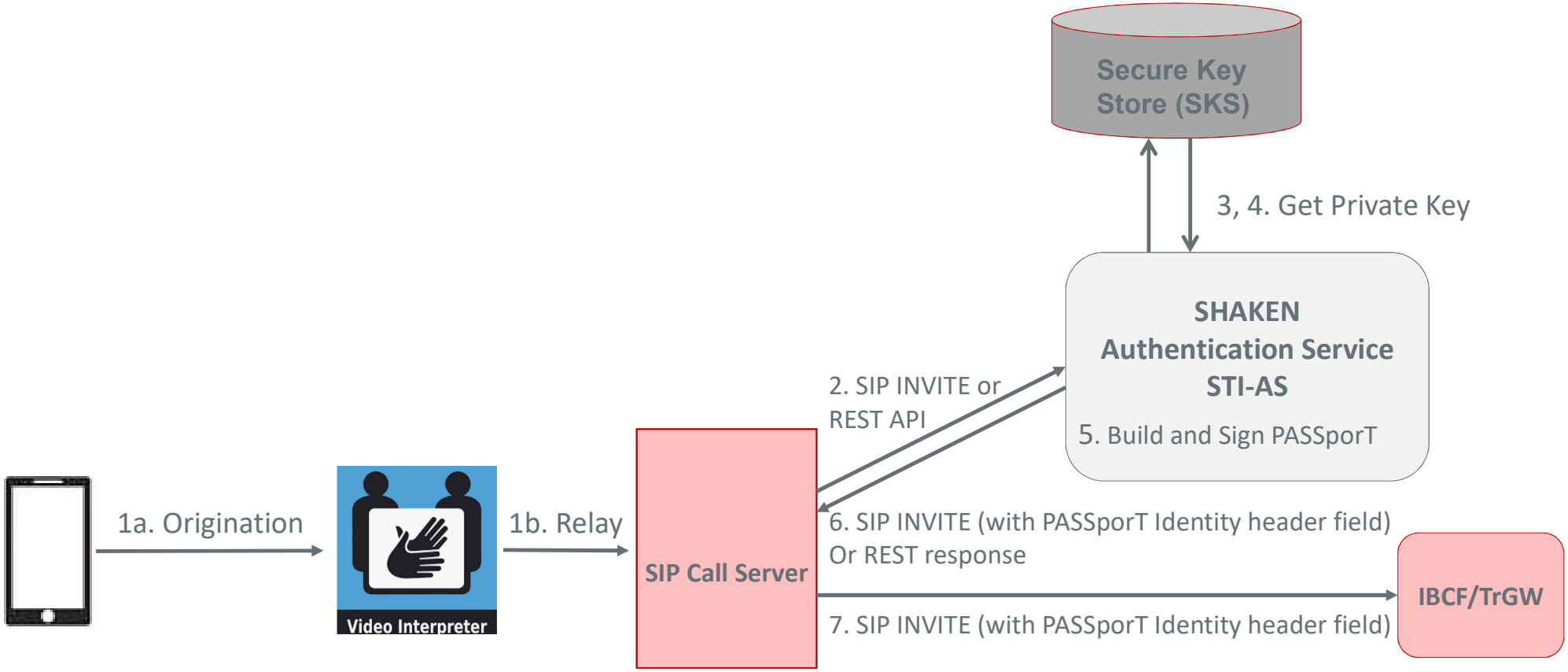

iconectiv®

© 2010-2021 iconectiv, LLC. All rights reserved.

verification @ terminating SP (TSP)

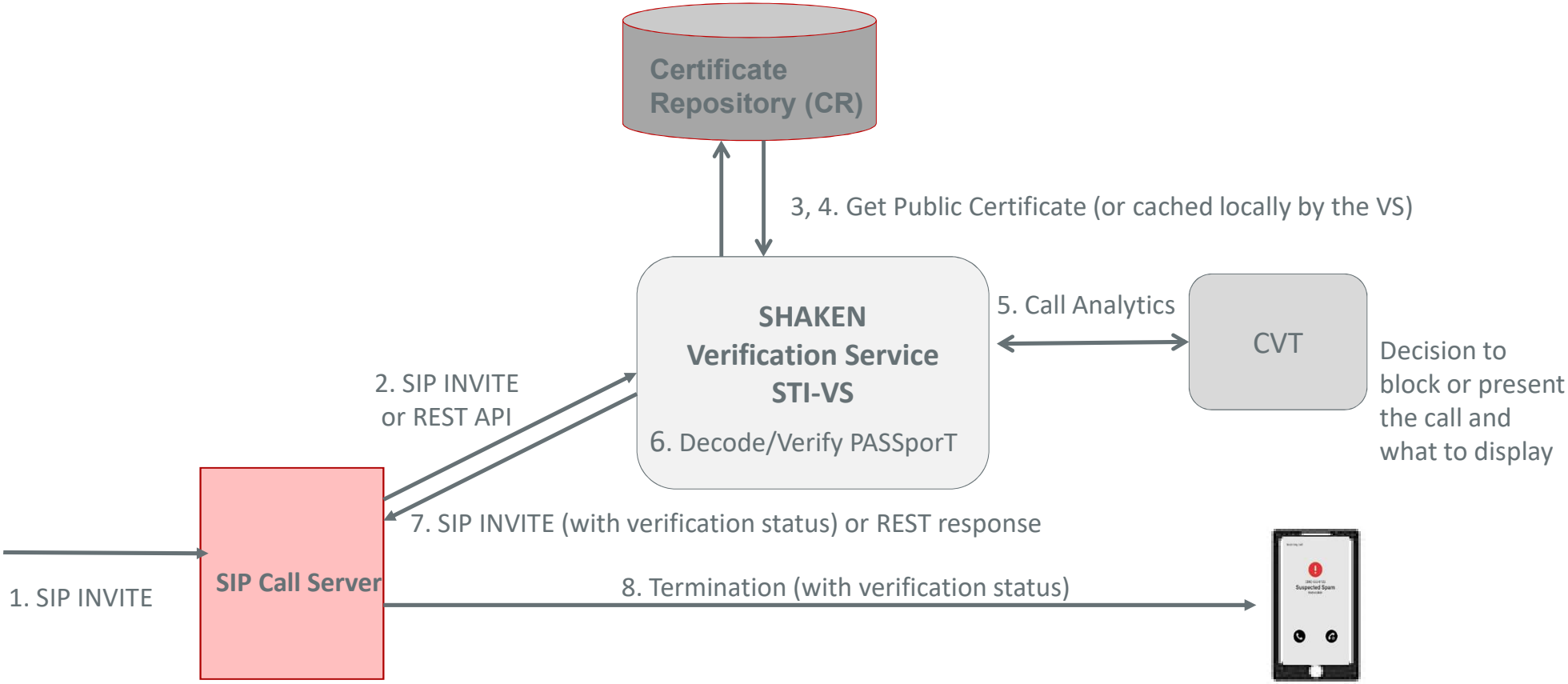

© 2010-2021 iconectiv, LLC. All rights reserved.

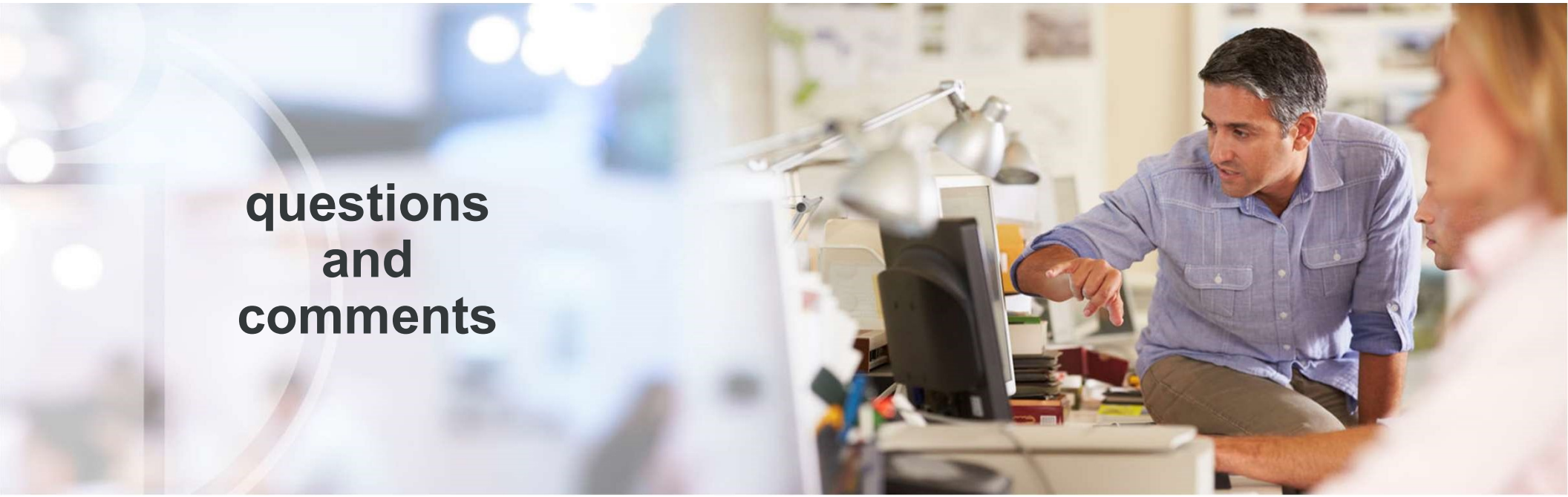

thank you

Chris Drake – CTO: cdrake@iconectiv.com

www.iconectiv.com

@iconectiv

iconectiv

iconectiv

© 2010-2021 iconectiv, LLC. All rights reserved.