TOSHIBA
Leading Innovation >>>

VCEG-AI18
Block-based Adaptive Loop Filter

Takeshi Chujoh
Goki Yasuda
Naofumi Wada
Takashi Watanabe
Tomoo Yamakage

TOSHIBA CORPORATION
July 16, 2008

Copyright 2008, Toshiba Corporation.

Summary

- **Coding efficiency improvement tool**
  - Introduction of
    - loop filter based on Wiener filter
    - Block-based filter on-off approach
    - Chroma filtering

- **Experimental results**
  - Average of 7.2% and up to 26% gain for all prediction structures
  - Average of over 11% gain for HD sequences

Background

- **Post-filter hints SEI**
  - JVT-U035
    - Over 6% bitrate reduction for 720p sequences were showcased
  - VCEG-AH26
    - About 5% bitrate gain for intra coding
  - VCEG-AI34

- **Adaptive (Wiener) Loop Filter**
  - C402 and C437 at Geneva meeting
    - Average of over 5% bitrate gain (C402)
  - VCEG-AI14

Block diagram (BALF : Block-based Adaptive Loop Filter)

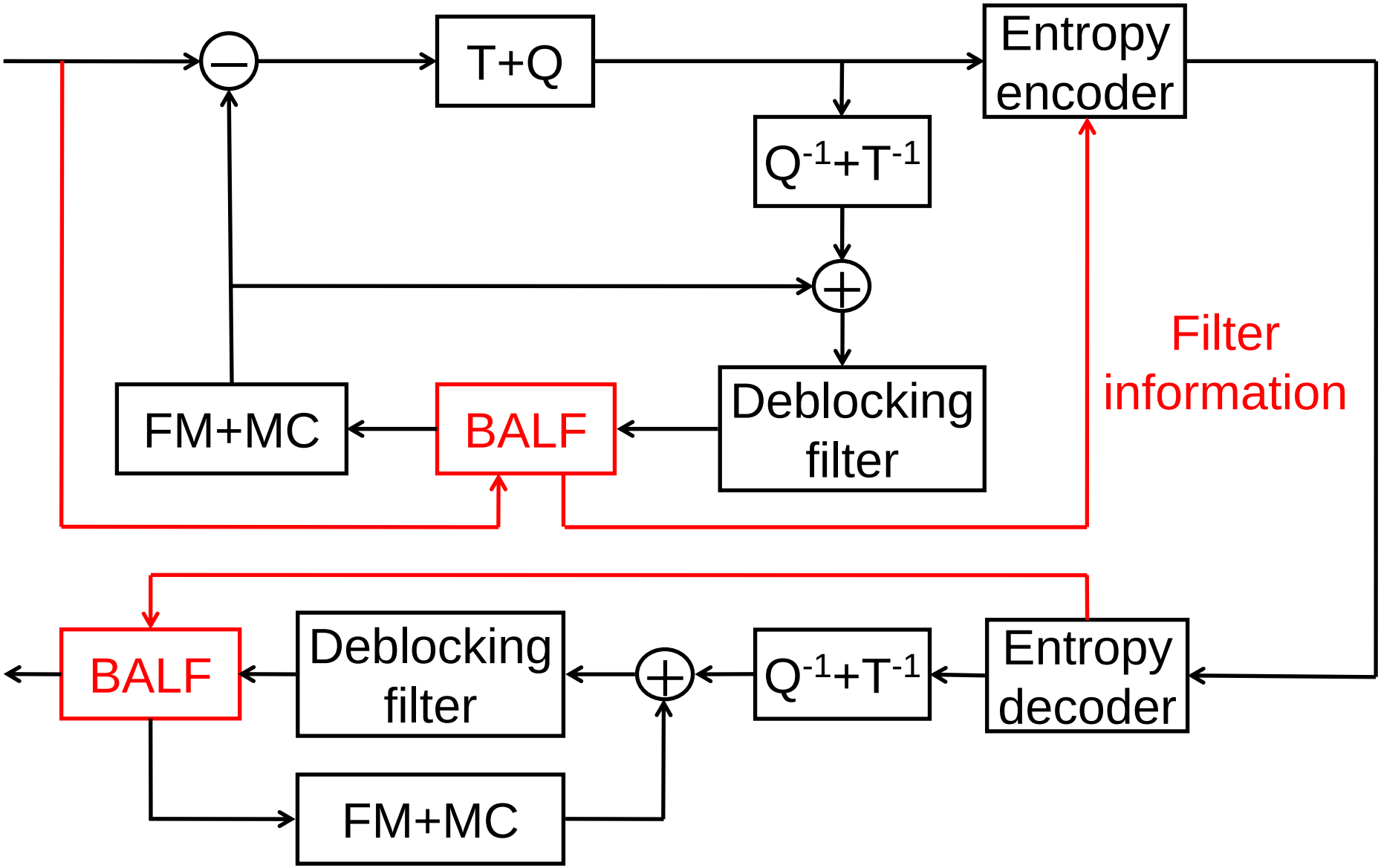

Design of filter coefficients

- **Classical image restoration approach based on Wiener filter**

- **Block-based Filter On-Off approach**
  - Explicit flags for filtering on-off block by block
  - Only filtering of improved blocks

- **Improvement of loop filtering effect**

Example of filter on-off

Example of filter on-off

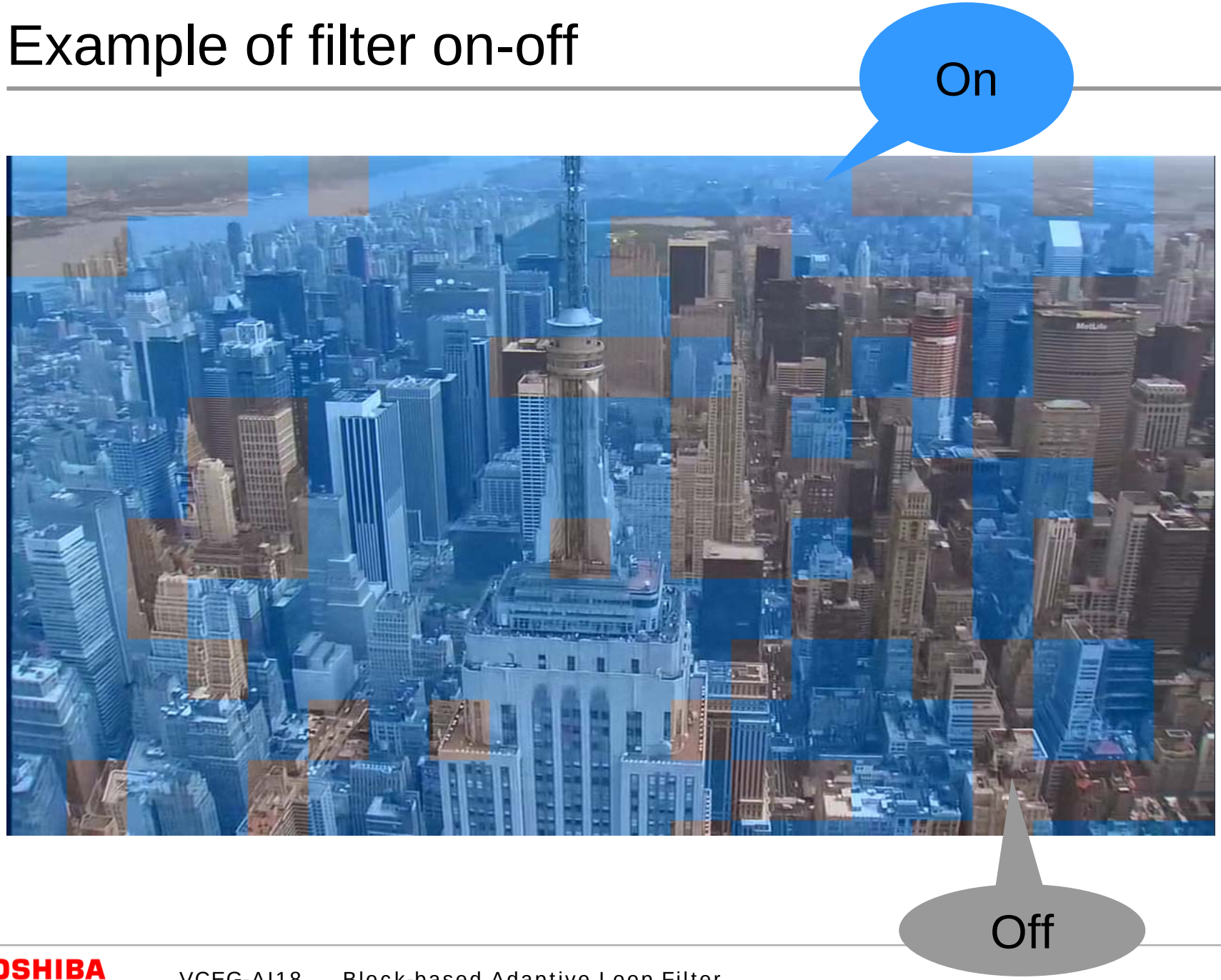

Specification (Normative)

- **Point symmetry FIR filter with offset**
  - Luminance (stored picture) 7x7 tap, 26 coefficients
  - Luminance (non-stored picture), Chroma 5x5 tap, 14 coefficients

- **Luminance**
  - Flag indicates filter on-off for each block
  - Block size can be from 8, 16, 24, 32, 48, 64, 96 and 128
  - Flag information is sent with coefficients

- **Chroma**
  - Only Cb, Only Cr, or both Cb and Cr

- **Differential coding for coefficients**

Test Condition

- **Block-based Adaptive Loop Filter**

- **The encoder configurations are as follows:**
  - KTA software version 1.9 (jm11.0kta1.9r1)
  - All condition based on VCEG-AE10r1

- **PSNR gain (ΔPSNR) and bitrate saving (ΔBitrate) are calculated based on BD-SNR (VCEG-M33) using BJM add-in supplied in VCEG-AE07.**

Results on common test condition (Efficiency)

Test Sequence	Baseline (IPP)		High (IPP)		High (IBBP)		High (HB)	
	Δ Bitrate (%)	Δ PSNR (dB)	Δ Bitrate (%)	Δ PSNR (dB)	Δ Bitrate (%)	Δ PSNR (dB)	Δ Bitrate (%)	Δ PSNR (dB)
container_qcif	11.30	0.524	3.23	0.142	1.62	0.078	0.66	0.030
foreman_qcif	4.05	0.233	3.19	0.179	1.79	0.100	1.59	0.089
silent_qcif	3.61	0.207	2.99	0.164	3.41	0.185	2.73	0.147
foreman_cif	7.90	0.349	6.13	0.265	3.41	0.150	3.38	0.150
mobile_cif	7.94	0.423	6.88	0.365	5.82	0.284	9.60	0.455
paris_cif	2.93	0.168	2.17	0.122	1.68	0.095	0.78	0.041
tempete_cif	4.72	0.231	3.81	0.182	4.12	0.177	5.84	0.240
Average of QCIF and CIF	**6.06**	**0.305**	**4.06**	**0.203**	**3.12**	**0.153**	**3.51**	**0.164**
BigShips	12.14	0.368	9.64	0.290	9.45	0.262	12.22	0.330
City	22.06	0.764	15.96	0.526	13.31	0.432	11.52	0.408
Crew	18.19	0.554	8.31	0.212	6.88	0.169	6.20	0.157
Night	6.41	0.250	5.24	0.203	5.10	0.183	4.15	0.145
ShuttleStart	26.02	1.022	16.09	0.556	10.44	0.372	9.05	0.311
Average of 720p	**16.96**	**0.591**	**11.05**	**0.357**	**9.03**	**0.284**	**8.63**	**0.270**
Average of all sequence	**10.61**	**0.424**	**6.97**	**0.267**	**5.59**	**0.207**	**5.64**	**0.209**

Total average **7.20% and 0.277dB**

R-D Curve (Shuttlestart)

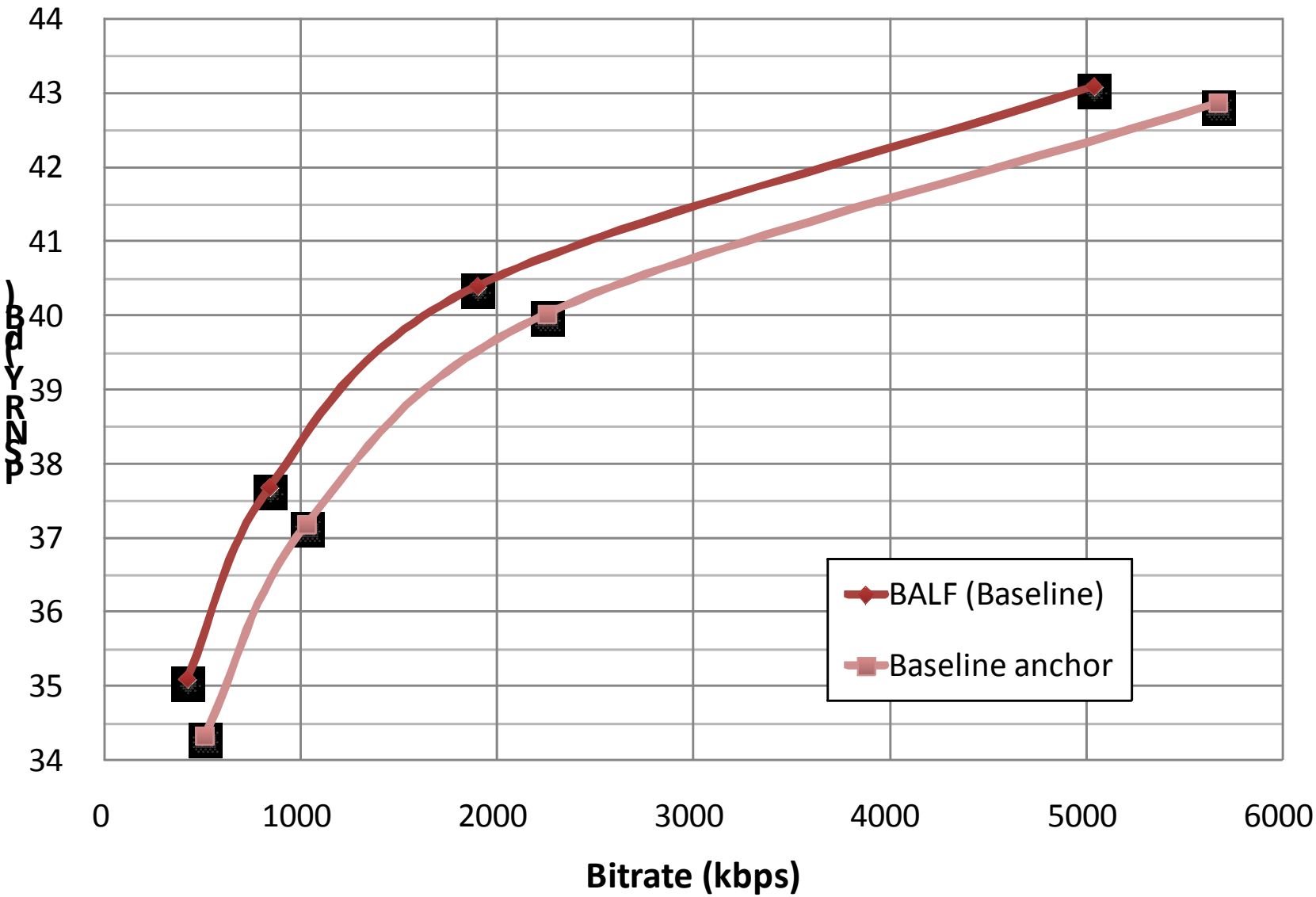

Other 720p sequences

Test Sequence	Baseline (IPP)		High (IPP)		High (IBBP)		High (HB)	
	Δ Bitrate (%)	Δ PSNR (dB)	Δ Bitrate (%)	Δ PSNR (dB)	Δ Bitrate (%)	Δ PSNR (dB)	Δ Bitrate (%)	Δ PSNR (dB)
Cyclists	21.40	0.677	20.61	0.627	16.93	0.486	13.93	0.395
Harbour	14.14	0.624	13.34	0.584	14.11	0.552	9.00	0.333
Jets	14.84	0.433	12.36	0.334	9.30	0.253	8.48	0.260
Optis	10.22	0.267	9.12	0.242	8.03	0.212	8.24	0.214
Panslow	12.53	0.248	10.54	0.209	9.45	0.169	11.77	0.207
preakness	4.72	0.213	4.12	0.183	5.37	0.203	1.34	0.052
Raven	**22.85**	**1.005**	21.08	0.876	14.25	0.578	11.20	0.453
Sailormen	13.64	0.413	11.82	0.358	10.64	0.294	8.01	0.210
Spincalendar	17.20	0.466	14.99	0.380	13.43	0.321	14.07	0.403

Total average **12.14% and 0.382dB**

1080p sequences

Test Sequence	Baseline (IPP)		High (IPP)		High (IBBP)		High (HB)	
	Δ Bitrate (%)	Δ PSNR (dB)	Δ Bitrate (%)	Δ PSNR (dB)	Δ Bitrate (%)	Δ PSNR (dB)	Δ Bitrate (%)	Δ PSNR (dB)
Capitol_Records	6.21	0.229	8.50	0.260	3.99	0.143	3.42	0.128
Playing_Cards	20.53	0.826	21.78	0.705	13.07	0.519	9.26	0.404
Table_Setting	13.92	0.463	15.85	0.407	9.85	0.324	9.77	0.335
Freeway	8.62	0.357	8.95	0.269	7.47	0.298	5.36	0.212
Night	7.57	0.266	11.85	0.362	4.03	0.137	3.01	0.118
Plane	34.40	**1.471**	**39.37**	1.411	25.66	1.009	21.93	0.903
Rolling_Tomatoes	11.60	0.192	16.41	0.151	6.20	0.052	7.45	0.108
Staples	17.15	0.534	10.62	0.264	4.86	0.132	4.94	0.143
Waves	30.73	1.255	24.59	0.764	10.57	0.397	9.59	0.361
toys_and_calendar	17.53	0.442	20.38	0.427	10.75	0.281	8.20	0.232
walking_couple	10.58	0.302	11.35	0.244	8.11	0.215	6.03	0.165
vintage_car	14.00	0.244	12.35	0.219	9.71	0.165	8.53	0.157
CrowdRun	4.19	0.192	4.81	0.169	3.59	0.154	1.96	0.083
DuckTakeOff	7.08	0.293	9.03	0.254	6.36	0.212	6.53	0.206
IntotheTrees	7.57	0.144	7.81	0.142	5.94	0.111	5.54	0.104
OldTownCross	16.25	0.165	16.89	0.247	12.99	0.160	8.93	0.144
ParkJoy	4.71	0.230	5.52	0.191	3.74	0.169	3.55	0.155

Total average **11.02% and 0.331dB**

Results on common test condition (Complexity)

Test Sequence	Baseline (IPP)		High (IPP)		High (IBBP)		High (HB)	
	ΔEncTime (%)	ΔDecTime (%)	ΔEncTime (%)	ΔDecTime (%)	ΔEncTime (%)	ΔDecTime (%)	ΔEncTime (%)	ΔDecTime (%)
container_qcif	11.35	9.35	0.63	9.37	2.45	4.14	3.98	3.54
foreman_qcif	11.36	28.64	6.93	28.29	2.91	14.02	3.26	9.69
silent_qcif	11.50	11.25	6.47	12.52	2.89	4.54	3.22	5.30
foreman_cif	12.94	40.41	6.98	39.74	3.05	21.38	3.33	20.65
mobile_cif	13.24	63.99	0.54	69.21	0.72	50.08	2.11	55.65
paris_cif	13.28	15.51	7.14	13.68	3.53	10.10	3.66	5.98
tempete_cif	12.92	60.62	14.39	64.97	4.83	42.50	3.00	47.97
Average of QCIF and CIF	**12.37**	**32.83**	**6.15**	**33.97**	**2.91**	**20.97**	**3.22**	**21.25**
BigShips	58.13	68.15	30.57	71.07	7.12	50.77	6.15	61.49
City	53.69	68.75	8.97	74.14	3.04	47.62	3.96	56.43
Crew	58.92	81.84	11.05	84.55	5.47	54.35	6.22	58.91
Night	56.08	82.81	9.05	87.83	4.32	48.51	5.40	53.12
ShuttleStart	64.20	62.99	7.28	60.35	6.62	40.17	7.05	48.71
Average of 720p	**58.20**	**72.91**	**13.39**	**75.59**	**5.31**	**48.28**	**5.76**	**55.73**
Average of all sequence	**31.47**	**49.53**	**9.17**	**51.31**	**3.91**	**32.35**	**4.28**	**35.62**

Total average **ΔEncTime 12.21% and ΔDecTime 42.20%**

BALF + HP + NewDC

Test Sequence	Baseline (IPP)		High (IPP)		High (IBBP)		High (HB)	
	Δ Bitrate (%)	Δ PSNR (dB)	Δ Bitrate (%)	Δ PSNR (dB)	Δ Bitrate (%)	Δ PSNR (dB)	Δ Bitrate (%)	Δ PSNR (dB)
container_qcif	12.18	0.569	4.91	0.221	3.42	0.162	2.51	0.117
foreman_qcif	4.45	0.257	3.99	0.223	2.20	0.124	2.13	0.121
silent_qcif	3.61	0.203	3.44	0.194	3.09	0.164	2.70	0.148
foreman_cif	8.44	0.373	7.04	0.306	3.94	0.174	4.21	0.189
mobile_cif	8.15	0.434	7.04	0.373	5.54	0.269	9.85	0.468
paris_cif	3.36	0.191	2.20	0.123	0.32	0.017	0.36	0.022
tempete_cif	4.79	0.236	3.83	0.183	3.96	0.171	5.63	0.233
Average of QCIF and CIF	**6.42**	**0.323**	**4.63**	**0.232**	**3.21**	**0.154**	**3.91**	**0.186**
BigShips	12.82	0.392	10.81	0.329	10.34	0.290	13.18	0.359
City	23.21	0.808	17.31	0.573	14.03	0.461	12.33	0.438
Crew	18.52	0.565	11.44	0.299	9.76	0.244	8.08	0.206
Night	7.40	0.289	6.32	0.245	5.62	0.201	4.41	0.154
ShuttleStart	27.73	1.108	17.96	0.634	12.16	0.448	10.90	0.377
Average of 720p	**17.93**	**0.632**	**12.77**	**0.416**	**10.38**	**0.329**	**9.78**	**0.307**
Average of all sequence	**11.22**	**0.452**	**8.02**	**0.308**	**6.20**	**0.227**	**6.36**	**0.236**

Total average **7.95% and 0.306dB**

BALF (Anchor : HP + NewDC)

Test Sequence	Baseline (IPP)		High (IPP)		High (IBBP)		High (HB)	
	Δ Bitrate (%)	Δ PSNR (dB)	Δ Bitrate (%)	Δ PSNR (dB)	Δ Bitrate (%)	Δ PSNR (dB)	Δ Bitrate (%)	Δ PSNR (dB)
container_qcif	9.69	0.448	1.58	0.072	1.25	0.061	0.94	0.051
foreman_qcif	4.39	0.252	2.82	0.157	1.46	0.082	1.00	0.057
silent_qcif	2.83	0.157	3.03	0.172	2.97	0.157	2.79	0.149
foreman_cif	7.25	0.314	4.97	0.212	3.01	0.131	2.86	0.128
mobile_cif	7.16	0.378	6.31	0.332	5.70	0.278	9.45	0.449
paris_cif	2.89	0.162	0.89	0.051	0.74	0.042	0.60	0.032
tempete_cif	2.82	0.136	2.31	0.111	2.79	0.118	4.54	0.184
Average of QCIF and CIF	**5.29**	**0.264**	**3.13**	**0.158**	**2.56**	**0.124**	**3.17**	**0.150**
BigShips	5.64	0.167	3.92	0.116	5.13	0.138	8.38	0.222
City	11.48	0.369	10.00	0.327	8.52	0.279	8.91	0.305
Crew	16.60	0.500	4.90	0.123	5.56	0.132	6.36	0.156
Night	5.45	0.212	4.80	0.185	5.07	0.182	3.91	0.136
ShuttleStart	22.53	0.873	4.36	0.144	6.34	0.220	5.96	0.202
Average of 720p	**12.34**	**0.424**	**5.60**	**0.179**	**6.13**	**0.190**	**6.70**	**0.204**
Average of all sequence	**8.23**	**0.331**	**4.16**	**0.167**	**4.05**	**0.152**	**4.64**	**0.173**

Total average **5.27% and 0.205dB**

Block-based Adaptive Post Filter

Test Sequence	Baseline (IPP)		High (IPP)		High (IBBP)		High (HB)	
	Δ Bitrate (%)	Δ PSNR (dB)	Δ Bitrate (%)	Δ PSNR (dB)	Δ Bitrate (%)	Δ PSNR (dB)	Δ Bitrate (%)	Δ PSNR (dB)
container_qcif	-1.18	-0.049	-0.90	-0.034	-0.12	-0.005	-0.37	-0.016
foreman_qcif	1.11	0.064	0.91	0.051	0.49	0.027	0.50	0.029
silent_qcif	1.43	0.075	0.88	0.045	0.52	0.025	0.22	0.010
foreman_cif	2.75	0.119	1.92	0.081	1.13	0.051	1.08	0.050
mobile_cif	3.27	0.170	2.45	0.128	2.93	0.143	4.37	0.203
paris_cif	1.12	0.062	0.64	0.035	0.07	0.003	-0.15	-0.009
tempete_cif	2.53	0.121	1.66	0.078	2.23	0.094	3.14	0.127
Average of QCIF and CIF	**1.58**	**0.080**	**1.08**	**0.055**	**1.04**	**0.048**	**1.26**	**0.056**
BigShips	6.39	0.188	5.39	0.158	5.38	0.149	8.30	0.222
City	14.36	0.482	11.18	0.358	9.49	0.304	10.01	0.347
Crew	9.28	0.273	5.42	0.138	5.16	0.126	4.82	0.122
Night	6.65	0.257	5.59	0.214	4.52	0.160	4.41	0.154
ShuttleStart	10.97	0.407	8.09	0.268	4.26	0.153	5.76	0.196
Average of 720p	**9.53**	**0.321**	**7.13**	**0.227**	**5.76**	**0.178**	**6.66**	**0.208**
Average of all sequence	**4.89**	**0.181**	**3.60**	**0.127**	**3.00**	**0.103**	**3.51**	**0.119**

Total average **3.75% and 0.132dB**

Demo (Shuttlestart, QP=32, Baseline)

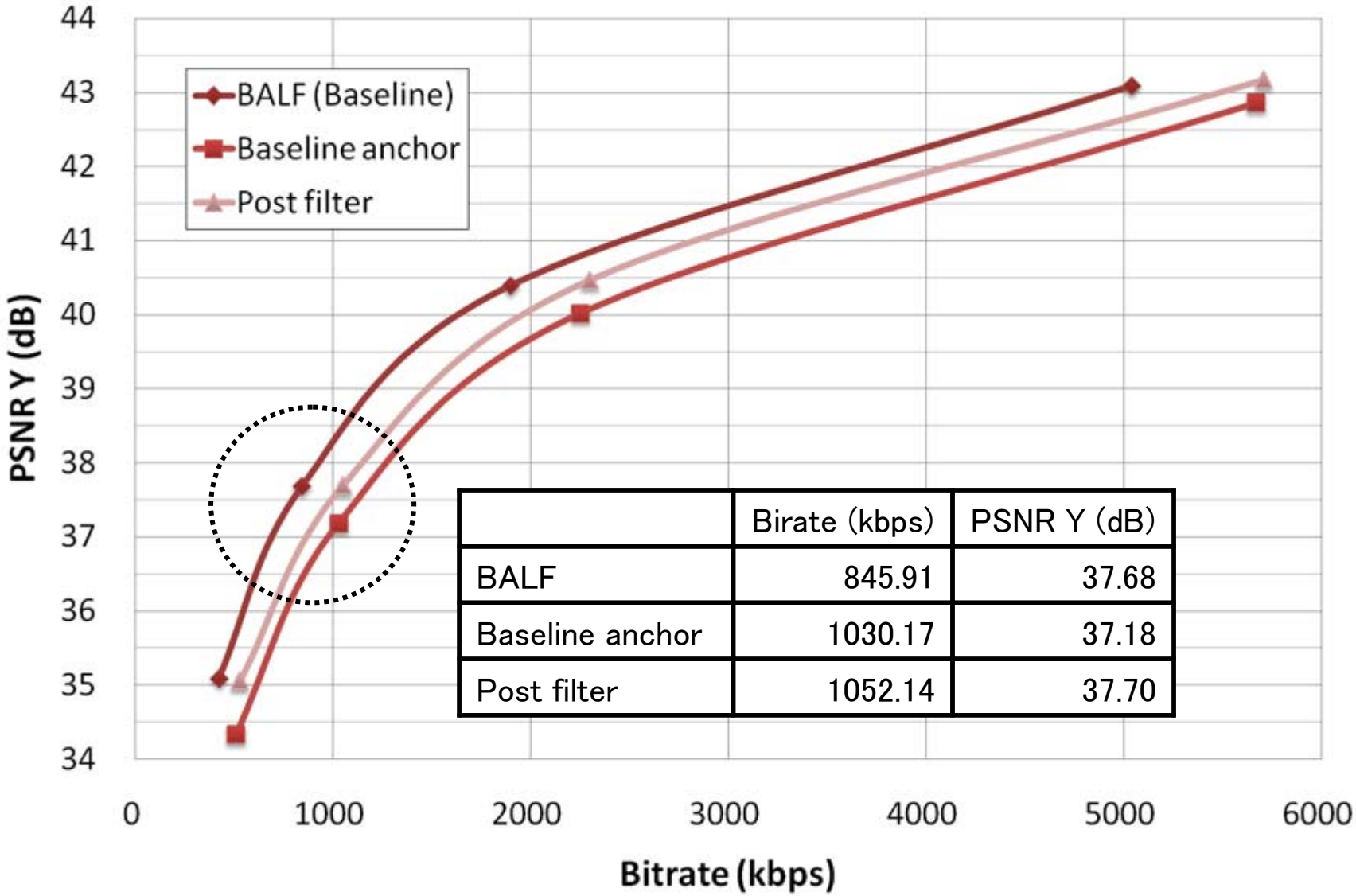

	Birate (kbps)	PSNR Y (dB)
BALF	845.91	37.68
Baseline anchor	1030.17	37.18
Post filter	1052.14	37.70

Conclusion

- **Block-based Adaptive Loop Filter is proposed**
  - Loop filter based on Wiener filter
  - Block-based filter on-off approach
    - Improvement of gain from post-filter

- **Average of 7.2% and up to 26% gain for all prediction structures on common condition**
  - Average of 11.42% gain for 720p sequences
  - Average of over 11% gain for other 26 HD sequences

TOSHIBA

Leading Innovation >>>